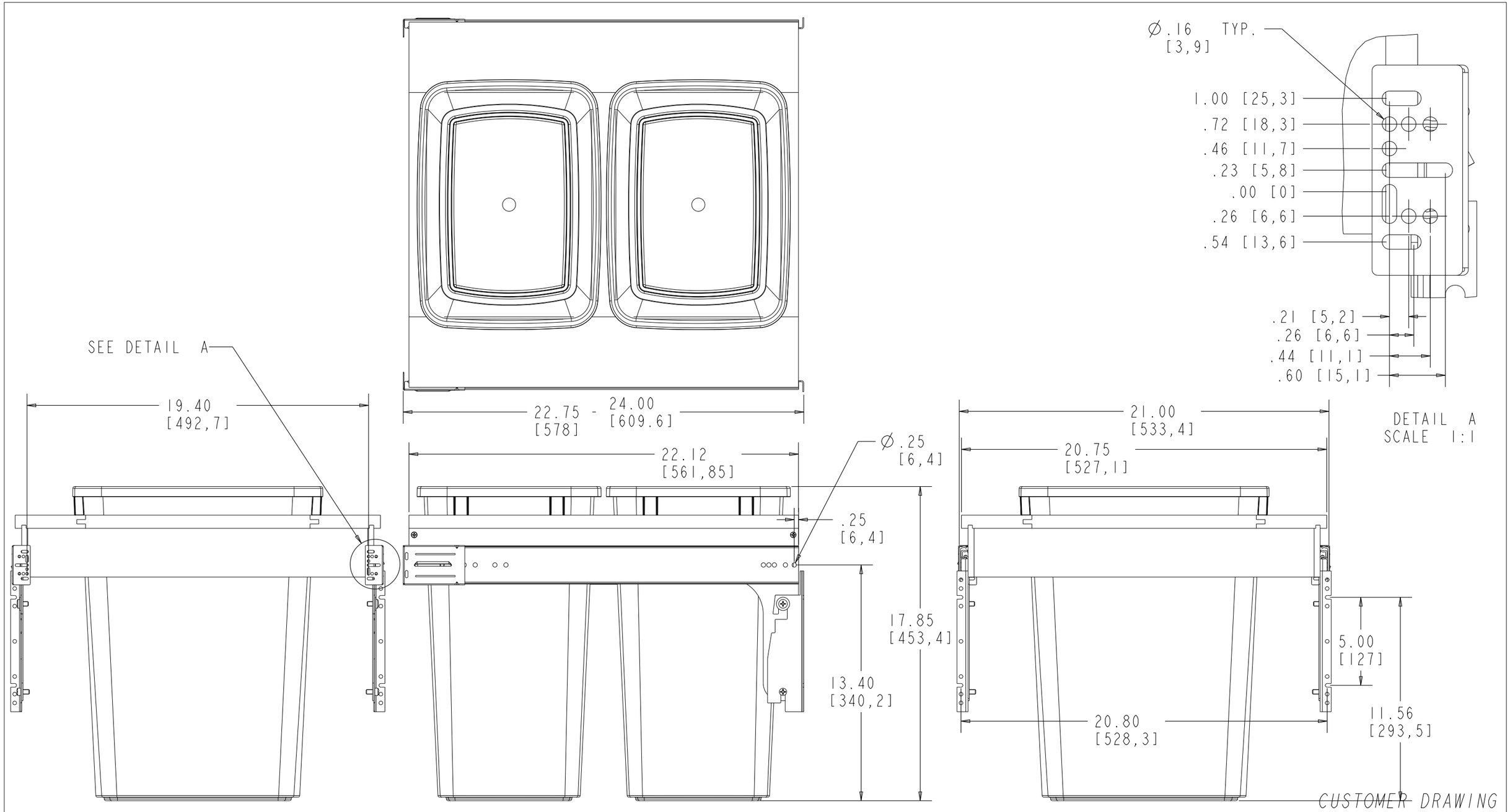

REV.	DATE	BY	DESCRIPTION OF CHANGE

INCH [MM]

AMERICAN PROJECTION

	BY	DATE
DRAWN	KRR	9-29-10

TOLERANCES
MAT. DEC.
(WOOD) .XX ±.03 [.8mm]
(OTHER) .XX ±.02 [.5mm]
(ALL) .XXX ±.005 [.13 mm]
FRACTIONS ±1/32 [.8 mm]
ANGLES ±1/2°

MATERIAL

FINISH

REV-A-SHELF® INC.

SIZE B

DOUBLE 35QT
BASE 24 1-1/2 FACE

DRAWING NO. 4WCTM-24DM2_CUST

SCALE 3:16

PART NO. 4WCTM-24DM2

SHEET 1 OF 2

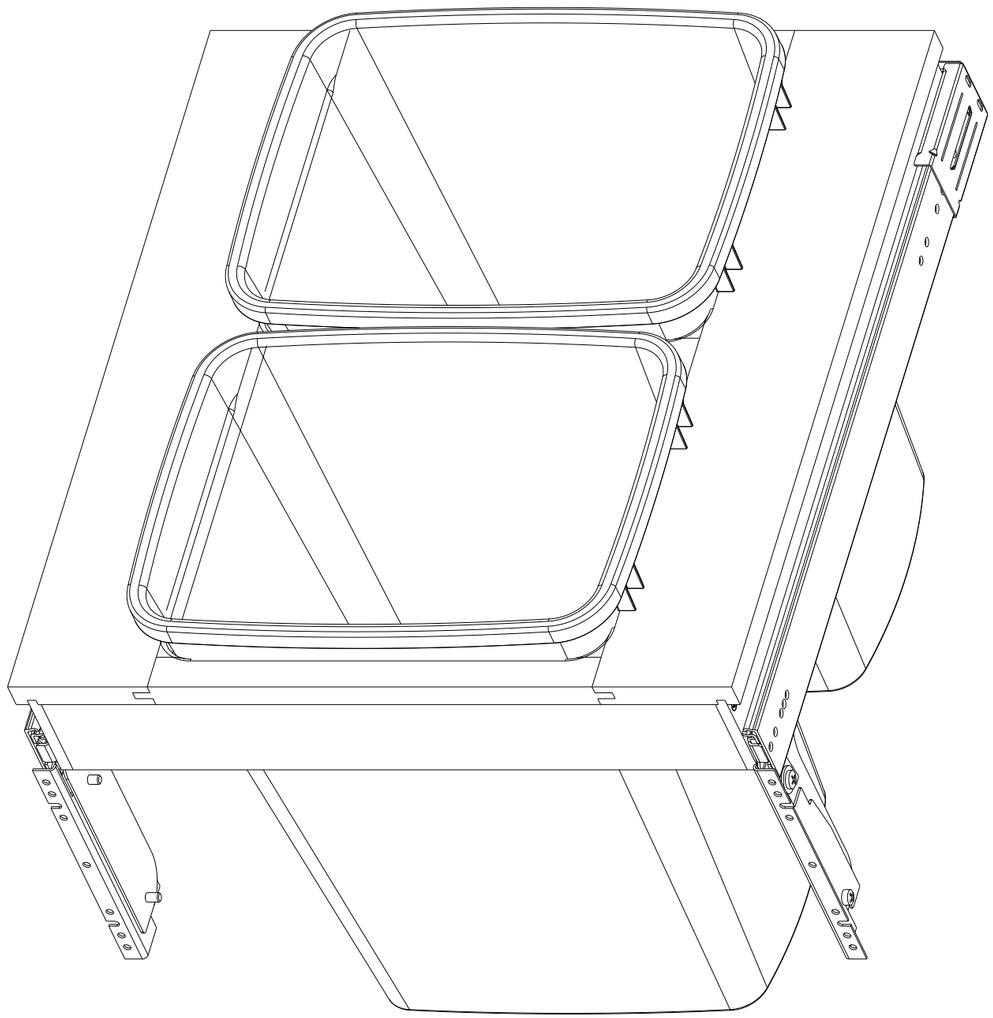

PART DIMENSIONS		
	MIN	MAX
WIDTH		21.00
DEPTH	22.75	24.00
HEIGHT		17.85
WEIGHT		
DIAMETER		
RADIUS		
CONTAINTER CAPACITY	35	
CONTAINER UOM	QT	

MIN CABINET OPENING	
WIDTH	21.00
DEPTH	22.75
HEIGHT	18.35

PRODUCT MAX WEIGHT RATING

SLIDE SPECIFICATIONS				
SLIDE TYPE	BALL BEARING	SLIDE EXTENSION	1 1 /2" O.T.	MAX WEIGHT RATING
SLIDE CLOSING	NORMAL	SLIDE LENGTH	22.00 [560,0]	
SLIDE MOUNTING	SIDE	SLIDE FINISH	ZINC	150LB

CUSTOMER DRAWING

REV.	DATE	BY	DESCRIPTION OF CHANGE

INCH [MM] — AMERICAN PROJECTION

	BY	DATE
DRAWN	KRR	9-29-10

TOLERANCES
MAT. DEC.
(WOOD) .XX ±.03 [.8mm]
(OTHER) .XX ±.02 [.5mm]
(ALL) .XXX ±.005 [.13 mm]
FRACTIONS ±1/32 [.8 mm]
ANGLES ±1/2°

REV-A-SHELF®, INC.

SIZE B — DOUBLE 35QT BASE 24 1-1/2 FACE

MATERIAL

FINISH

DRAWING NO. 4WCTM-24DM2_CUST

SCALE 1:4

PART NO. 4WCTM-24DM2

SHEET 2 OF 2