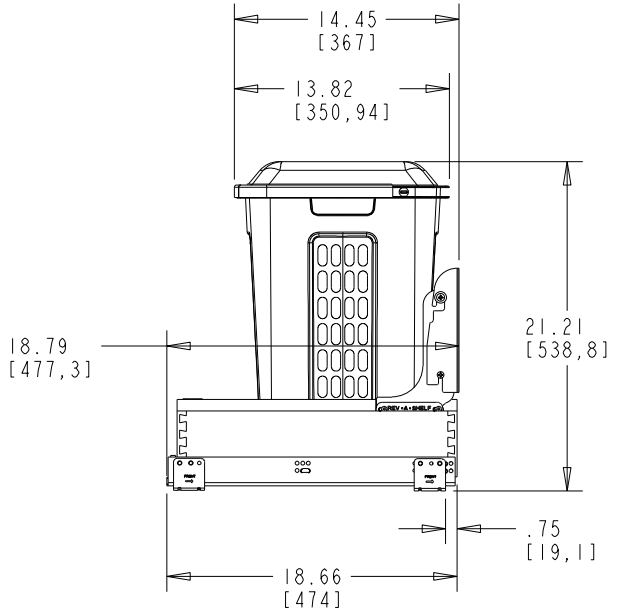

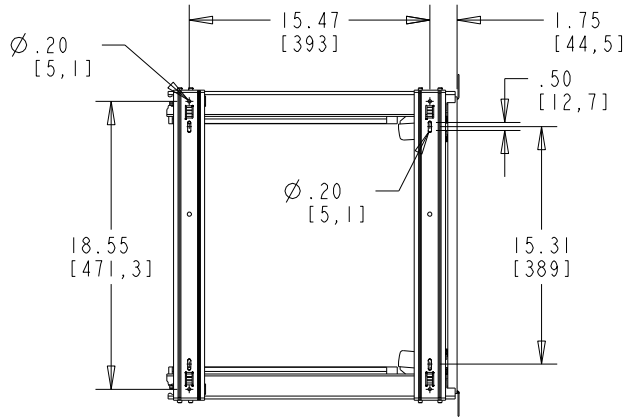

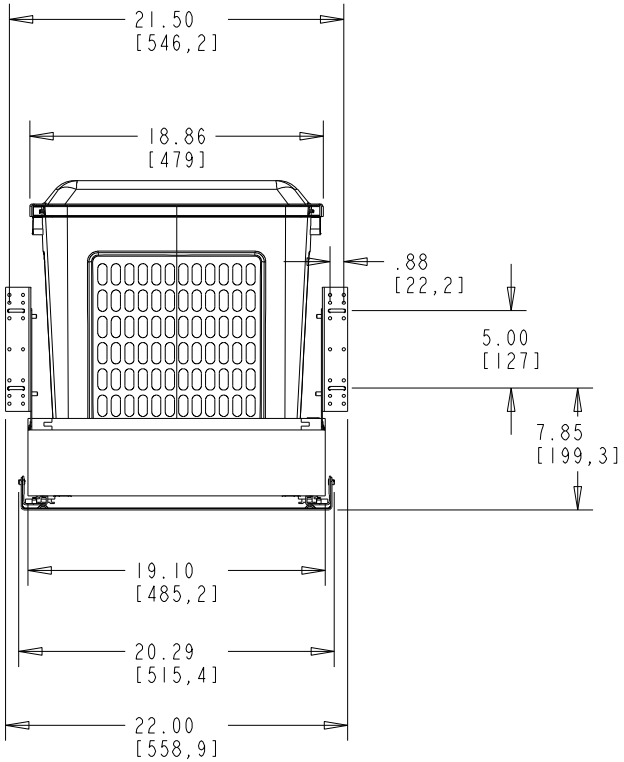

CUSTOMER DRAWING

This drawing is the property of Rev-A-Shelf (RAS) and is disclosed in confidence to the extent its subject matter is original to RAS. Any vendor receiving this drawing from RAS shall hold and use this drawing for the sole benefit of RAS and shall not disclose it to, or use or reproduce it for any third party, or perform any act adverse to the interest of RAS with respect to this drawing without the express written permission of RAS. Vendors shall not revise any physical, dimensional or performance characteristic unless authorized by Rev-A-Shelf Engineering.

REV.	DATE	BY	DESCRIPTION OF CHANGE
A	12-19-17	KRR	ECN17-109

INCH [MM]	AMERICAN PROJECTION	DRAWN	BY: KRR; DATE: 3-21-16
TOLERANCES: MAT. DEC. (WOOD) .XX ±.03 [.8mm]; (OTHER) .XX ±.02 [.5mm]; (ALL) .XXX ±.005 [.13 mm]; FRACTIONS ±1/32 [.8 mm]	ANGLES ±1/2°	MATERIAL	REV-A-SHELF®, INC.
		FINISH	SIZE: B — BLUM SC BOTTOM MOUNT HAMPER
			DRAWING NO.: 4WH-VCSC-21DM-1 — SCALE: 0.125
			PART NO.: 4WH-VCSC-21DM-1 — SHEET 1 OF 2

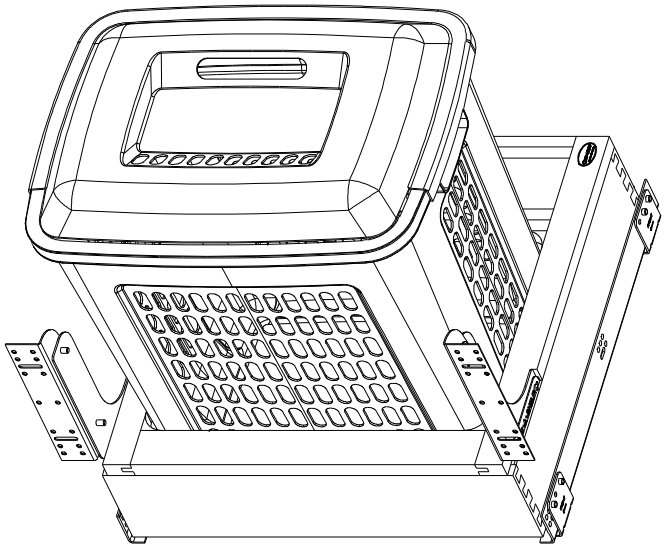

PART DIMENSIONS		
	MIN	MAX
WIDTH	20.29	
DEPTH	18.66	
HEIGHT	21.21	
WEIGHT		
DIAMETER		
RADIUS		
CONTAINTER CAPACITY	1.5	
CONTAINER UOM	BUSHEL	

MIN CABINET OPENING	
WIDTH	21
DEPTH	18.75
HEIGHT	21.38

PRODUCT MAX WEIGHT RATING

SLIDE SPECIFICATIONS				
SLIDE TYPE	BLUM TANDEM	SLIDE EXTENSION	FULL	MAX WEIGHT RATING
SLIDE CLOSING	SELF/SOFT	SLIDE LENGTH	18" [457]	
SLIDE MOUNTING	SIDE	SLIDE FINISH	ZINC	135 LB

CUSTOMER DRAWING

This drawing is the property of Rev-A-Shelf (RAS) and is disclosed in confidence to the extent its subject matter is original to RAS. Any vendor receiving this drawing from RAS shall hold and use this drawing for the sole benefit of RAS and shall not disclose it to, or use or reproduce it for any third party, or perform any act adverse to the interest of RAS with respect to this drawing without the express written permission of RAS. Vendors shall not revise any physical, dimensional or performance characteristic unless authorized by Rev-A-Shelf Engineering.

REV.	DATE	BY	DESCRIPTION OF CHANGE
A	12-19-17	KRR	ECN17-109

INCH [MM] — AMERICAN PROJECTION

TOLERANCES
MAT. DEC.
(WOOD) .XX ±.03 [.8mm]
(OTHER) .XX ±.02 [.5mm]
(ALL) .XXX ±.005 [.13 mm]
FRACTIONS ±1/32 [.8 mm]
ANGLES ±1/2°

DRAWN	BY	DATE
	KRR	3-21-16

REV-A-SHELF®, INC.

SIZE B — BLUM SC BOTTOM MOUNT HAMPER

MATERIAL

FINISH

DRAWING NO. 4WH-VCSC-21DM-1

PART NO. 4WH-VCSC-21DM-1

SCALE 0.188

SHEET 2 OF 2